REV	DATE	ECO	DESCRIPTION	BY	CK
00	5/92		RELEASED PER ECO		

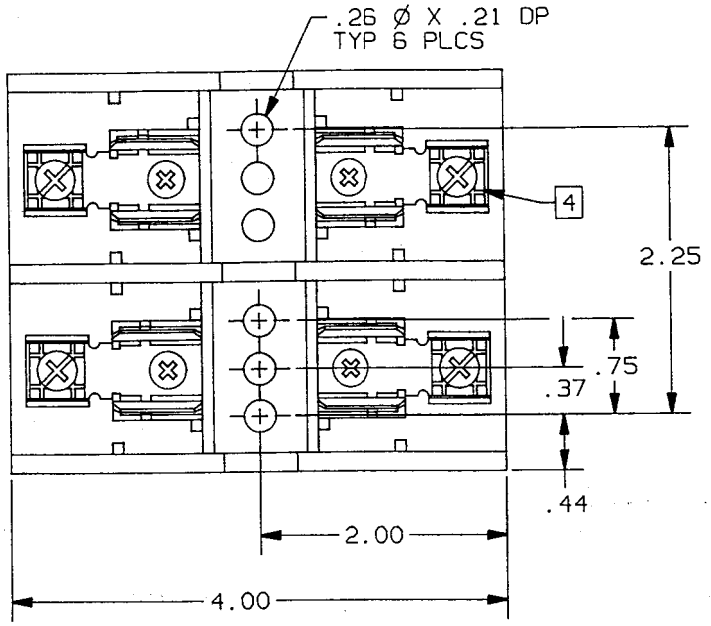

P/N	RMS SYM RATING	FUSE CLASS	TORQUE (IN-LBS)	WIRE		UL		CSA
				°C	TYPE	FILE NO.	GUIDE NO.	REPORT NO.
60317J	200K	J	20	60/75	CU	E52283	IZLT	LR32169
60327J	200K	J	20	60/75	CU			

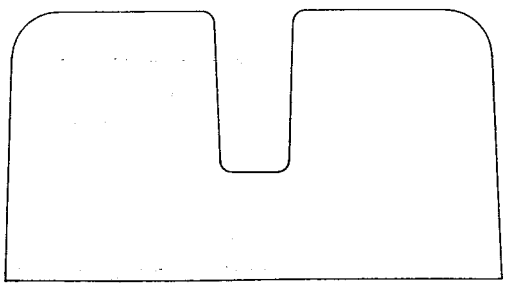

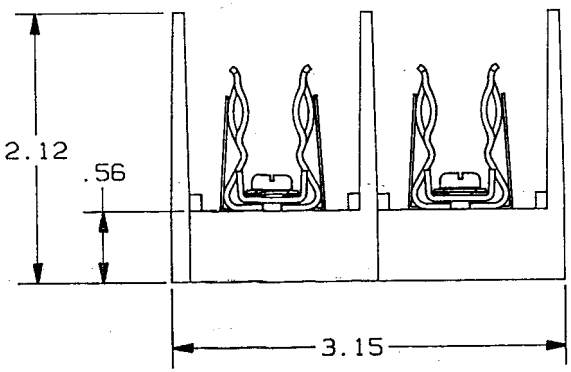

REFERENCE
JUN 1 2 1992
P/N 60317J
60327J

4. SHOWN W/PRESSURE PLATE CONNECTION
3. 600V-30A CLASS "J" SP RF 2 POLE
2. P/N 60317J USES SCREW CONNECTION.
   P/N 60327J USES PRESSURE PLATE CONNECTION
1. MATL COMPOSITION AND RATING:
   BASE-THERMOPLASTIC 125°C RTI.
   CONNECTOR-CU ONLY

NOTES: UNLESS OTHERWISE SPECIFIED

GOULD
GOULD INC.
P.O. BOX 729
MARBLE FALLS, TX 78654
CIRCUIT PROTECTION DIV.

DRAWN BY:	DATE:	MIT. REL.
KDS	5/92	92-076
CHECKED BY:	DATE:	SCALE: NONE

TOLERANCE TO BE APPLIED UNLESS OTHERWISE SPECIFIED: .XXXXA.0005±, .XXXA.005±, .XXA.01±, .XA 0.01 X/XA1/32
UNSPECIFIED ANGLES±1°, SPECIFIED ANGLES±0°30'
DIMENSIONS APPLY AFTER PLATING
ALL SURFACES TO BE 125 UNLESS OTHERWISE SPECIFIED
BREAK ALL SHARP EDGES
THIS DRAWING AND ALL INFORMATION THERE ON IS THE PROPERTY OF GOULD INC. AND IS SUBJECT TO RETURN ON DEMAND. THIS INFORMATION IS CONFIDENTIAL AND MUST NOT BE MADE PUBLIC OR COPIED UNLESS AUTHORIZED.
REFDOC:•

DESCRIPTION: FUSE BLOCK
IDENTIFICATION NO. & REVISION: 05B0394