REV	DESCRIPTION	DATE	APPD
00	RELEASED	5/6/91	GO

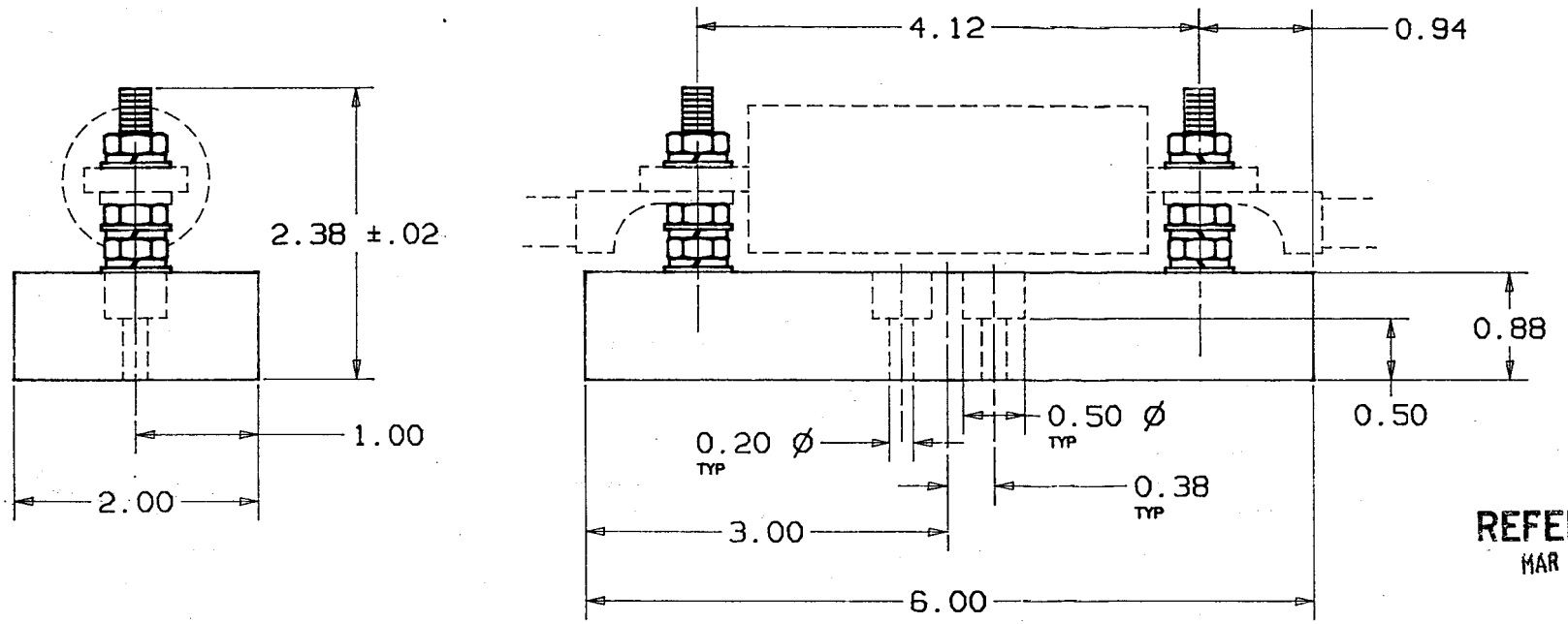

REFERENCE
MAR 1 6 1992

PART NO. P266J

NOTES UNLESS OTHERWISE SPECIFIED
- ALL DIMENSIONS ARE IN INCHES
- STAMP OR ETCH DWG. NO. ON PART
- REMOVE ALL BURRS AND SHARP EDGES
- TOLERANCES: XXXX±.0005; XXX±.005; XX±.01; X±.04; ANGLES ±0°30'

THIS DRAWING AND ALL INFORMATION THEREON IS THE PROPERTY OF GOULD, IS CONFIDENTIAL, MUST NOT BE COPIED OR MADE PUBLIC UNLESS AUTHORIZED AND IS SUBJECT TO RETURN ON DEMAND.

ASSY DWG USED ON		REF OR SIM DWG	

MATERIAL

FINISH

SIGNATURES		DATE
DRWN	B. Tangone	5/6/91
CHKD		
ENGD		
APPD	G. Oakley	5/6/91

GOULD SHAWMUT
GOULD SHAWMUT
P.O. BOX 729
MARBLE FALLS, TX 78654

PRODUCT INFO: A

TITLE
FUSE BLOCK, FORM 101
10-50 AMP 1000V

DWG NO	REV
05B0342	00

SCALE	FILE NO	SHEET
1/1		1 OF 1